Operating Instructions

FORCED-ACTION MIXERS
COLLOMATIC XM 2-650
COLLOMATIC XM 3-900

(230 V / 400 V - EU)

CE

Collomix Rühr- und Mischgeräte GmbH
Daimlerstraße 9
85080 Gaimersheim/Germany
Telefon: +49 8458 3298-0
www.collomix.com

Contents

1.	**Layout**	**3**
1.1	Technical data	4
1.2	EC Declaration of Conformity	4
2.	**Definitions of technical terms**	**5**
3.	**Safety instructions**	**6**
3.1	Responsibility of the user	7
4.	**Intended use**	**8**
4.1	Liability and warranty	8
5.	**Transportation instructions**	**9**
5.1	Delivery	9
5.2	Moving the machine manually	9
5.3	Transportation using a crane or hoist	9
6.	**Disposal**	**9**
7.	**Trolley**	**10**
7.1	Assembly of trolley, 65 liters	10
7.2	Assembly of trolley, 90 liters	10
7.3	Handling	11
8.	**Mixing tools**	**12**
8.1	Tooling options	13
8.2	Adjusting the height of the mixing tools	13
8.3	Changing the mixing tools.	13
8.4	Edge scraper	13
9.	**Use of the correct mixing tub**	**13**
10.	**Power connection**	**13**
11.	**Using for the first time**	**14**
11.1	Opening and closing the machine	14
11.2	Switching on	14
11.3	Stopping	14
11.4	Setting the timer switch	15
12.	**Description of the safety equipment**	**16**
12.1	Guard cage	16
12.2	Safety switch	16
12.3	Power switch / EMERGENCY STOP switch	16
13.	**Troubleshooting**	**17**
14.	**Care and maintenance**	**18**
15.	**Annex**	**19**
15.1	Electrical circuit diagram	19
	Exploded drawing of the trolley	20

1. Layout

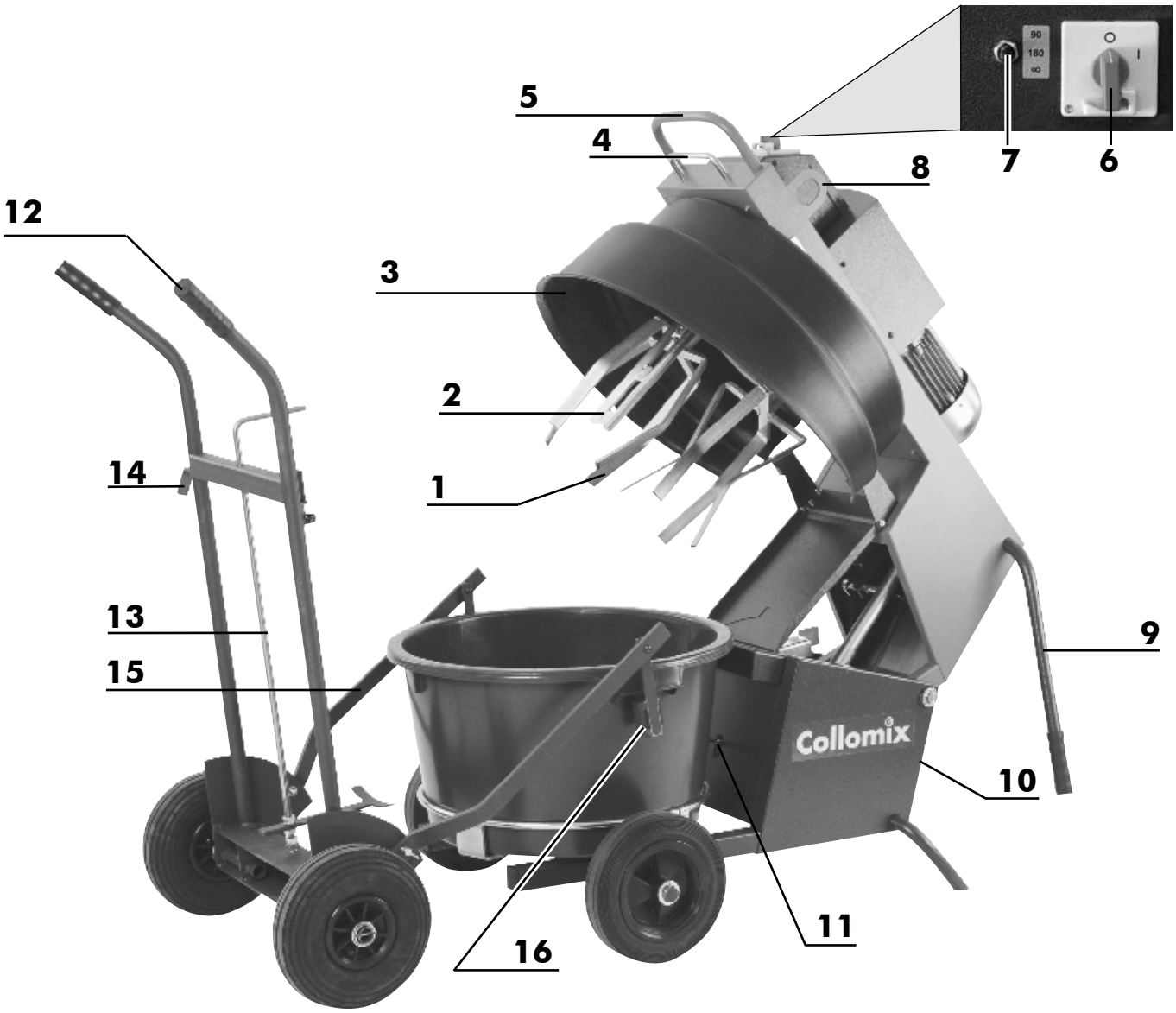

Key to illustration

1. Mixing tools
2. Edge scraper
3. Guard hood
4. Latch bar
5. Handle
6. Power switch / EMERGENCY STOP switch
7. Timer switch
8. Jack rings (2x)
9. Carrier handles, lockable
10. Cable connector
11. Control pin for the mixing tub
12. Trolley (accessory)
13. Axle bar with tub stop
14. Tub holder
15. Arms
16. Tub mount

1.1 Technical data

Type:	**COLLOMATIC XM2-650**	**COLLOMATIC XM2-650**	**COLLOMATIC XM3-900**
Power supply:	**230 Volt**	**400 Volt**	**400 Volt**
Rated power:	1,1 kW / 50 Hz	1,5 kW/50 Hz	1,5 kW/50 Hz
Fuse:	16 Amp. slow blow	16 Amp. slow blow	16 Amp. slow blow
Motor protection class:	IP 54	IP 54	IP 54
Tool speeds:	2 x 150 min^{-1} 1 x 770 min^{-1}	2 x 150 min^{-1} 1 x 770 min^{-1}	2 x 150 min^{-1} 1 x 770 min^{-1}
Rim scraper speed:	40 min^{-1}	40 min^{-1}	40 min^{-1}
settable mixing times:	90 / 180 Sec. / Dauerbetrieb	90 /180 / Dauerbetrieb	90 /180 / Dauerbetrieb
Total weight:	ca. 105 kg	ca. 105 kg	ca. 117 kg
Sound pressure level:	70 dB (A)	70dB (A)	70dB (A)
Sound power level:	< 85 dB (A)	< 85 dB (A)	< 85 dB (A)

Manufacturer:

COLLOMIX Rühr- und Mischgeräte GmbH
P.O. Box 11 46, D-85078 Gaimersheim/Germany
Daimlerstr. 9, D-85080 Gaimersheim
Telefon: +49 84 58 32 98-0
Telefax: +49 84 58 32 98 30

1.2 EC Declaration of Conformity

We declare herewith that this product conforms with the following standards and standard-setting documents: EN 12100, IEC 60745-1, EN 55014, EN 60204, EN 61000-4 in accordance with directives 2006/95/EEC, 2004/108/EEC, 2006/42/EEC.
Technical files at: Collomix Rühr- und Mischgeräte GmbH, Abt. Technische Entwicklung, Daimlerstr. 9, 85080 Gaimersheim, Germany

Alexander Essing
Collomix Rühr- und Mischgeräte GmbH

2. Definitions of technical terms

Direction of rotation
This refers to the direction in which the gear unit and the mixing tools rotate under three-phase alternating current (400 V only).

Limit switch
This is an electrical switch which switches a function on/off when a moving part of a machine has reached its final position.

Potentially explosive atmosphere
This is an atmosphere in which the amount of inflammable substances in the air is so high that they could ignite at any time if a naked flame or sparks is/are present.

Earth-leakage circuit-breaker This is a specially marked current distributor with a special protection function to provide protection against fault current (fault current circuit -breaker).

H 07 RN-F
This is a type description in accordance with EC directives for a rubber-insulated flexible cable designed for high mechanical stresses.

Cross-section 2.5^2
Cross-section of the copper wire in the power cable.

Edge scraper
The tool which moves continuously around the edge of the container and forces the material back into the middle.

Power supply point
The socket outlet which provides the power supply.

Spindle
The threaded supports on the gear unit for screw-mounting the mixing tools.

Rpm
Revolutions per minute.

VDE
Verband Deutscher Elektrotechniker (Association of German Electrotechnical Engineers), also an authorized test institute.

Viscosity

The flow characteristics of material	low Viscosity	=	thin-bodied
	high viscosity	=	semi-liquid

Cable
Power cable

Forced-action mixer
This is a mixer with counter-rotating mixing tools and an edge-scraper which are guided evenly through the mixing material.

3. Safety instructions

This machine has been manufactured in accordance with the latest approved rules of technical practice applicable at the time of its development and production, and is safe to use. However, it may be the cause of danger if misused or used for any purpose other than that for which it is intended by persons who are not suitably qualified and trained. **The machine is therefore to be used and work of maintenance carried out only by persons who have read the operating instructions and who are acquainted with the occupational safety and accident prevention regulations in force in your country.**

- **Please read and observe these instructions before you work with the machine. There is a direct risk of personal injury or harm to the health of the user or third party if these instructions are not observed.** The notes and instructions are denoted by danger symbols in the text.
- Never use the machine if it is not in good working order, use it for the intended use only and have proper regard for safety and danger at all times. All faults which may impair safety must be rectified immediately!
- Wear close-fitting clothing and safety shoes when using the machine and never wear jewelry of any kind. Wear a hair net if you have long hair.
- Make sure the machine stands securely.
- The machine must always be operated and loaded from the front only.

- Never allow any third persons to stand within your working area.
- Never work in any way which could be unsafe.
- Comply with all electrical regulations applicable to the place of use when you set up the machine.
- **Always pull out the mains plug when not using the machine, before changing the mixing tool or before starting any maintenance work.**
- Never use the cable to pull the plug out of the socket outlet. Protect the cable from heat, oil and sharp edges.
- For outdoor use, use only cables which have been approved for the purpose and bear corresponding markings.
- Never connect the machine to household socket outlets. It may only be connected to special power outlets, e.g. distribution boards for construction sites with earth-leakage circuit-breakers.
- If a cable reel is used, the cable must be fully unwound. There is a risk of the cable catching fire from overheating. It can also cause a loss of power which will in turn trigger the undervoltage fuse.
- Before you switch on the machine, check that the tool wrench and any other objects have all been removed from the mixing tub.
- Never mix any materials with a flash point of below 21°C. Never use any solvents with a flash point of below 21°C to clean the machine. Risk of explosion! Never use the machine in any areas where there is a potentially explosive atmosphere. Risk of explosion!
- Always make sure the machine is at a standstill before you ever take any material samples.
- **Do not operate the machine without the guard cage or without any of the parts of the housing. Risk of crushing!**
- **The consequence of deliberately shutting off any of the safety functions is an acute risk of accidents and injury.**
- Never use the trolley for any other purpose than for transporting the original Collomix mixing tub for which it is designed.
- Only open and close the machine with the handle provided. There is a risk of crushing if you attempt to open and close it at any other point.
- Always replace the gas-pressurized spring with a new one if it is defective. Never open the gas-pressurized spring as it is pressurized. Risk of injury!

- Make sure that the control pin moves without hindrance at all times and that the limit switch also works properly at all times. It is imperative that these never become soiled. A malfunction here may cause the mixing tools to start up unintentionally. Risk of crushing!
- If the machine is lifted by a crane or similar, the lifting ropes/cables or belts must only be fastened to the described points provided on the machine. Never stand under the suspended load.
- Use only original replacement parts.

3.1 Responsibility of the user

These Operating Instructions must be kept in close proximity to the machine and must be available to all persons working with or on the machine at all times.

Never use the machine if it is not in good working order or is not safe to use. Check that the machine is in proper working order every time before you start using it.

4. Intended use

The forced-action mixer is a mobile electric mixer. It has been designed for both outdoor and indoor use. It is designed for the mixing of both thin-bodied and heavy, viscous chemical building products such as miscellaneous mortars, concrete, cement, loam mortar, leveling compounds and epoxy-resin compounds, multi-component building materials and materials for fireproof and acidproof installations. The machine is designed for use by all the building and building-related trades and by specialist building contractors, as well as in industry in general.

Any use which is over and above the intended use and/or which deviates from the intended use is not permitted and shall be deemed to be misuse.

The machine is driven by an electric motor. The power is transmitted by means of a planetary gear unit. This converts the power into three different speeds and transmits the speeds to the mixing tools and the edge scraper. The speeds are as follows:

Edge scraper: 40 rpm Mixing tools: 2 x 150 rpm or: 1 x 150 rpm and 1 x 770 rpm

In the mixing tub 2 counter-rotating mixing tools are guided through the mixing material while rotating around their own axes and the middle of the gear unit at the same time. The edge scraper, which moves continuously around the edge of the container, forces the material back into the middle. This ensures that the material is mixed very quickly and thoroughly.

The trolley (accessory) is designed to enable the mixing tub to be easily loaded and unloaded by just one person. At the same time, thin-bodied material can be easily poured out using the pouring device on the trolley.

The numbers given in brackets in these Operating Instructions refer to the numbers in the layout on page 2.

4.1 Liability and warranty

Within the scope of the conditions of supply, the manufacturer issues a 12 month warranty which applies to single-shift operation and is counted from the date of initial start-up. It covers all defects arising from faulty material or workmanship. Please note that all warranty claims must be accompanied by a proof of purchase.

All essential warranty repair work must only be carried out by adequately trained service engineers or by third parties with express prior authorization from Collomix. The carrying out of unauthorized repairs may render the warranty null and void.

Please return any defective parts or machines carriage-paid to our factory. Collomix reserves the right to decide whether cost-free replacement of parts is applicable. Parts and labor covered by the warranty will be supplied free of charge. The warranty does not cover travel costs, expenses or possible overnight accommodation resulting from warranty repairs carried out off our premises.

Any further responsibility, with particular reference to damage claims, including foregone profit or other material losses on the part of the customer, is expressly excluded.

Warranty and liability claims for personal or material damages are excluded if attributable to one or more of the following causes:

- Incorrect operation of the machine, as defined in the Operating Instructions
- Damage caused by excessive accumulations of dirt and/or incorrect cleaning.
- Operation of the machine with defective safety and/or protection devices.
- Failure to observe the instructions in the Operating Instructions with respect to set-up, initial start-up, operation and maintenance of the machine.

5. Transportation instructions

5.1 Delivery

The machine is packed and delivered on a pallet. The machine has a net weight of 105 kg. The location of the machine's center of gravity is shown in the adjacent illustration.

Never attempt to move the machine off the pallet on your own. Seek the assistance of others or use hoisting equipment.

Center of gravity of the machine

5.2 Moving the machine manually

The machine is easy to move on all flat surfaces.

To do so, swing out the carrier handles and tighten using the thumb screw (see illustration). It is essential that the handles be fastened because when lifted the machine can tip forward, especially on an uneven surface (center of gravity).

Take hold of the carrier handles with both hands, lift and then move the machine as you would a wheelbarrow.

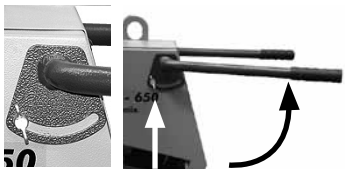

How to move the machine manually

5.3 Transportation using a crane or hoist

If the machine is to be moved using a crane or similar hoisting equipment you must ensure that the hoisting belt is of a suitable size. The machine comes with two lugs for attachment to a crane. The lashing belt must be fed through these lugs.

6. Disposal

In Germany and Austria the machine can be brought to public waste collection points for the disposal of electrical scrap. WEEE Reg. No. DE 44746302 Where this is not possible, dismantle the parts and take to a responsible center for recycling.

7.0 Trolley (accessory)

The trolley (accessory) is designed for loading and unloading the mixing tub to and from the machine. At the same time the locking device on the trolley can be used to enable thin-bodied material to be poured out wherever it is required.

The trolley is supplied for 65 liter tubs as standard. For use with 90 liter tubs the trolley has to be assembled with the upgrade set which includes the two larger arms.

7.1 Assembly of trolley for 65 liter tub

First remove the two cable binders from the moving parts.

Fit the two handle ends and fasten each of them with a screw.

Tighten the two arms with the thumb screws.

7.2 Assembly of trolley for 90 liter tub

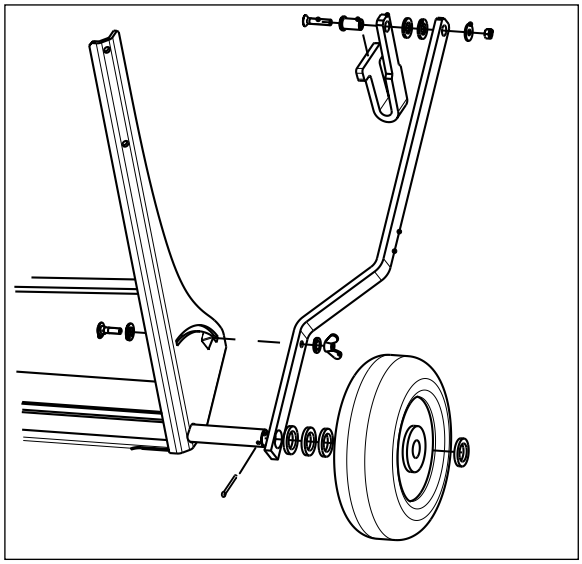

To replace the arms you have to remove the wheels and replace the two tub mounts (see adjacent illustration).

You will require the following tools: Universal pliers, SW 5 socket-wrench and SW 13 open-ended wrench.

7.3 Handling

- Take hold of the trolley by both handles.
- Move the two tub mounts under the tub and hook them both into the two recessed handles on the tub.
- Press against the axle with one leg. Make sure that the tub is correctly in place.
- Tilt the trolley towards you until you have the tub in balance.

- If you are processing thin-bodied materials you can pour them by applying the locking device:
- Pick up the tub as described above. Then set the trolley down lengthwise on the floor. The tub swings free.
- First set the tub stop to vertical. The hook on the tub holder extends over the edge of the tub and holds it.
- Then turn the tub holder so that its handle is positioned vertically upwards. The tub is now locked.
- Now lift the trolley again slowly. As soon as you have reached a certain angle the material will flow out of the tub.
- Once you have finished pouring, set the trolley down again and release the tub holder and tub stop.

Using the pouring device

8. Mixing tools

Your forced-action mixer comes with three different mixing tools (Standard: universal mixing tools and a star-type mixing tool). These will enable you to mix materials of all viscosities.

8.1 Tooling options

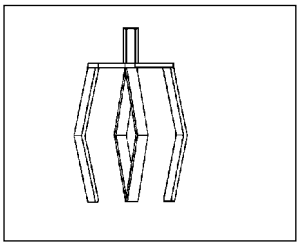

Universal mixing tool XM 160 (70.153)

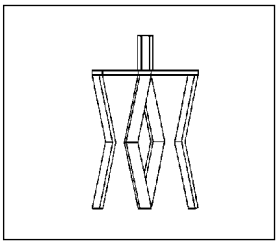

Universal mixing tool XM 195 (70.155)

Both mixing tools rotate at a speed of 150 rpm. Use this tooling option for mixing all high-viscosity, viscous and heavy materials such as, for example.

- Ready-mixed mortar
- Quartz-filled epoxy-resins
- Fine concrete
- Fireproof and acidproof materials
- Fillers
- Screed
- Ceramic compounds
- Acoustic plaster
- Loam mortar
- 2-component and multi-component materials

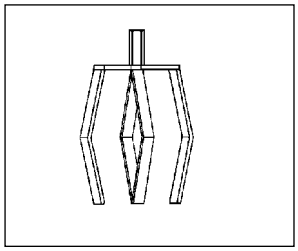

Universal mixing tool XM 160 (70.153)

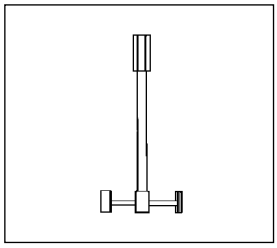

Dissolver ST 160 (70.157)

This tooling option should be selected for the preparation of thin-bodied material or very light material which has a tendency to form lumps. The XM 160 rotates at a speed of 150 rpm and the Dissolver at 770 rpm, e.g.

- Self-leveling materials
- Flooring mixes
- Pouring mortars
- Multi-component materials
- Liquid plastics
- Grouting compounds
- Dispersions
- Gypsum-lime plaster

Three threaded spindles are available for the mixing tools. The two spindles for the universal mixing tools rotate at a speed of 150 rpm and have a size M 18 thread.

The third threaded spindle rotates at a speed of 770 rpm and is for the Dissolver. To ensure that this spindle is not fitted with the wrong tool it has a size M 16 thread.

8.2 Adjusting the height of the mixing tools

In order to prevent deposits of residual material collecting at the bottom of the tub the mixing tools are height-adjustable.To adjust them, slacken the hexagon nut on drive spindle and move the mixing tool up or down as required by turning to the left or right.

The mixing tools should be approx. 1 - 2 mm above the bottom of the tub. If they are set too low they will scrape against the bottom of the tub and damage it beyond repair.

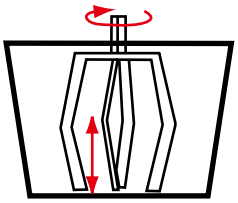

Adjusting the height of the mixing tools.

8.3 Changing the mixing tools

The mixing tools are fitted and adjusted at the factory. To remove them, slacken the locking nut slightly with an open-ended wrench. In doing so, hold a second open-ended wrench firmly against the mixing tool. Unscrew the mixing tool.

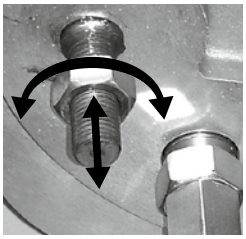

If you are not going to replace the tool with another one, screw the threaded plug onto the threaded spindle to prevent it from getting soiled. Remember to take account of the different thread sizes, M 16 and M 18.

When you screw a mixing tool to the spindle, always check the distance between the tool and the bottom of the tub. The tool must never come into contact with the bottom of the tub! Then retighten the locking nut against the mixing tool.

8.4 Rim scraper

The rim scraper is adjusted at the factory. If you readjust it you must take care to ensure that the arm of the edge scraper does not scrape against the edge of the tub. Adjust the rim scraper so that it is as close as possible to the edge and bottom of the tub. However, it must not be in contact with these surfaces. Use the hexagon nut to make the adjustments.

9. Use of the correct mixing tub

For guaranteed trouble-free operation and consistently satisfactory mixing results it is important that you use the original mixing tub.

This is a round 65 or 90 liter plastic tub made of impact-resistant PE material.

Tubs made by other manufacturers do not normally have the same dimensions and this will prevent the edge scraper form working properly. If a higher tub is used it may not be possible to close the machine.

Please contact your local dealer for the right original tub.

The machine will not start up unless the mixing tub is in place!

10. Power connection

Before plugging in the machine plug at the socket, check that all of the following points have been met in full:

Before using for the first time, check the electrical regulations applicable in the country and place of use. Make sure that there is no risk of cables and electrical equipment becoming damaged during operation.

Never connect the machine to a domestic socket outlet. It may only be connected to special power outlets, e.g. distribution boards for construction sites with earth-leakage circuit-breakers with a maximum of 0.05 tripping current.

To do so, use only a suitable rubber-sheathed cable (type H07RN-F) with a cross-section of 2.5 mm^2 and a cable plug in perfect working order.

If a cable reel is used, the cable must be fully unwound. If it is not unwound there is a risk of it getting hot and of an electric shock, because a coil effect may develop. There is a risk of the cable catching fire from overheating.

Should the length of the cable between the power outlet and the machine be excessive, this may lead to reduced performance. This will trigger the undervoltage protection.

Make sure that the cable does not cause any risk of tripping when it is laid.

For the 400 Volt-version:

It is imperative that you observe the direction of rotation of the motor. The mixing tools have to rotate in the direction of the red arrow on the swivel arm.

If the mixing tools rotate in the wrong direction they may work loose which can lead to damage to the tools and/or the machine.

11. Using for the first Time

11.1 Opening and closing the machine

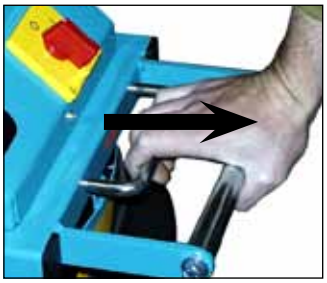

- **Take hold of the handle and the latch bar. Pull them towards you. This opens the lock.**
- **Pull the swivel arm upwards.**
- The machine now stands open in front of you. In the mixing tub you will find two open-ended wrenches and one other tool. Take these out and check that the tub is empty.
- **To close the machine, actuate the latch bar again as described above.**
- **Press the swivel arm down.**
- **Release the latch bar while doing so. It will lock into place on its own.**

11.2 Switching on

- **The machine must be open.**
- The mixing tub must be filled and positioned in the machine with the help of the trolley. The tub must sit correctly in the tub mount.
- **Switch the power switch to "1".**
- **Unlock the swivel arm and press it down until it locks.**

Switching on the power switch

For the 400 V version: Observe the direction of rotation indicated by the arrow.

If the machine is disconnected from the mains power supply while closed, it has to be fully opened and then closed again. Then the machine will run again.

11.3 Stopping

When the set time cycle has been completed the machine switches off automatically. **The**

power switch remains at "1". If you close the machine again the set time cycle will start running again from the beginning.

If **"Continuous mode"** is set the machine will stop when it is opened, or it has to be **switched off manually.** To do so, switch the power switch from "1" to "0".

If you open the swivel arm **while mixing is in progress the machine will stop immediately. The power switch remains at "1".** The machine will start up again when you close the swivel arm. If a time cycle has been set it will start running again at the beginning.

After opening you should then remove the mixing tub with the help of the trolley.

NOTE:

Please follow the manufacturer's processing instructions.

Never start the machine if there is any hardened material in the mixing tub or if any of the mixing tools are jammed.

Always make sure the machine is at a total standstill before you ever take any material samples.

11.4 Setting the timer switch

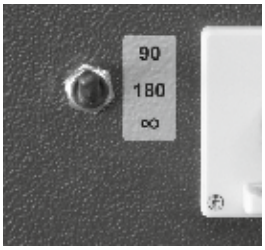

The timer switch is situated on the front panel of the machine.

„90“ position	The mixing tools run for 90 seconds before switching off automatically
„180“ position	The mixing tools run for 180 seconds before switching off automatically
„Continuous“ position	For switching on/off by hand; no automatic function

NOTE:
Whenever you mix any previously unfamiliar materials, determine the time required for mixing when you mix them for the first time. By setting the correct mixing time you will achieve evenly and thoroughly mixed material every time.

12. Description of the safety equipment

The safety devices previously referred to have been integrated in the machine for your personal safety and the safety of others. Make sure that these are in full working order at all times. Never start the machine if any safety devices are defective. Anyone who deliberately removes any safety devices or renders them inoperative is liable to prosecution. Such an action would cause incalculable danger for the user. At the same time this would also render the warranty for the machine null and void.

12.1 Guard cage

The gear unit and the mixing tools are protected from direct access by a guard cage which is fixed firmly to the frame of the machine. The mixing tools start to run before the machine is fully closed. The remaining gap between the swivel arm and the top edge of the tub is covered by the guard cage. In addition, we should also advise that it is not permitted to reach into the area between the guard cage and the tub while the machine is being closed or opened. The guard cage has an opening on the top, covered by a mesh guard, to enable you to see into the tub.

12.2 Safety switch

The machine is switched to enable status by the control pin, via a limit switch, as soon as a suitable tub is in the machine. The machine will not start without a tub in place. Make sure that the control pin moves freely at all times and make sure that it never becomes soiled. Bridging the switch or pressing it by hand without a tub in the machine is not permitted

12.3 Power switch/EMERGENCY STOP switch with undervoltage release

The power switch is also an EMERGENCY STOP switch at the same time and has an undervoltage release. Switch the switch to “0”. This switches the machine completely off. The undervoltage release is for ensuring that the switch automatically jumps to “0” in the event of undervoltage. The man purpose of this is to prevent the machine from being started up again unintentionally.
This can be the case in the following situations:

- In the event of a power failure
- If the cable is pulled from the plug
- In the event of a power failure in the mains power supply
- If the drive unit overheats Allow the drive unit to cool down and then try to restart. Reduce the amount of mixing material if necessary.

13. Troubleshooting

It is possible for faults to occur during use. The following checklist is intended to help you find the cause of each fault. All cases of electrical faults or major damage should only ever be rectified by a qualified expert.

Fault	Cause	Solution
Machine does not start	• Cable too long and/or cable cross-section not large enough • Plug not plugged in • No mains power supply available • Power switch on „0“ • No mixing tub in the machine • Incorrect mixing tub in machine • Defective start-up capacitor **(230 V only**) • Defective operating capacitor **(230 V only**)	• Check cable cross-section; must be 2.5 mm². Reduce cable length. • Plug in the plug • Check the mains power supply • Switch power switch to „1“, open the machine and close it again • Insert mixing tub correctly • Use the correct mixing tub • Replace the start-up capacitor • Replace the operating capacitor
Machine switches off after a short time and cannot be restarted	• Bimetal element triggered (machine overload) • Cable too long and/or cable cross-section not large enough • Cable was pulled out of the mains plug • Loss of power in the mains power supply • Defective start-up capacitor **(230 V only)** • Defective operating capacitor **(230 V only)**	• Allow the machine to cool down (min. 2 minutes); if necessary reduce the amount of mixing material • Check cable cross-section; must be 2.5 mm². Reduce cable length. • Re-insert the cable • Check the mains power supply • Replace the start-up capacitor • Replace the operating capacitor
Damage to the mixing tub or the mixing tools **No mixed material on tub bottom**	• Mixing tools set too low or too high	• Set the mixing tools to the correct height (see Section 8.2)
Mixing tools work loose during mixing	• Incorrect direction of rotation; tools run “in reverse” **(400 V only)**	• 2 phases on the plug have to be changed (only by an electrician)

14. Care and maintenance

Follow these notes and instructions to ensure that your forced-action mixer machine has a long life and offers trouble-free service.

Always pull out the power plug before carrying out any cleaning and maintenance work.

Grease or oil all moving parts every **100 operating hours**. Check that all moving parts run smoothly.

Clean the machine, mixing tools and the tub thoroughly every time you finish using them. **Never use any solvents** with a flash point of below 21°C **to clean the machine**. A quick and easy method of cleaning the mixing tools is to tip in a bucket of clean sand or similar and then switch on the machine for approx. 30 seconds.

Never use a **water hose or high-pressure cleaner** to clean the machine itself. This could cause the ball-bearings, etc., to run dry.

Replace all damaged or bent mixing tools.

Make sure that the control pin moves without hindrance at all times and that the limit switch also works properly at all times. It is imperative that these never become soiled. Never start the machine if there are any faults or any obvious damage. All faults should only ever be repaired by a qualified expert.

Use only original replacement parts.

Repairs should only be carried out by qualified experts. The manufacturer also offers a repair service at its factory.

15. 1 Circuit diagram - 230 Volt, 50 Hz

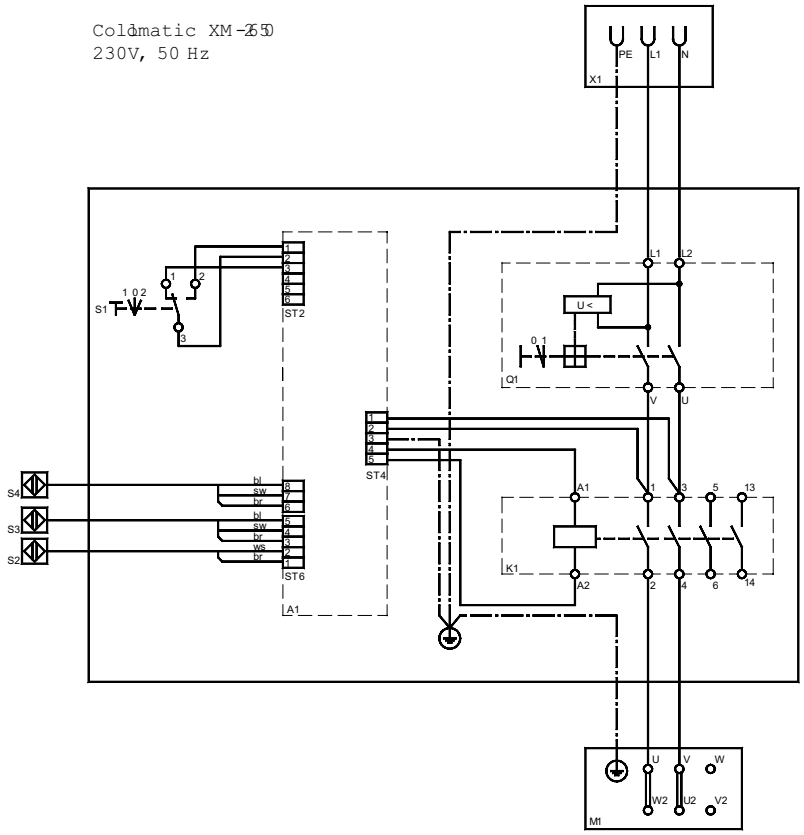

Circuit diagram - 400 Volt, 50 Hz

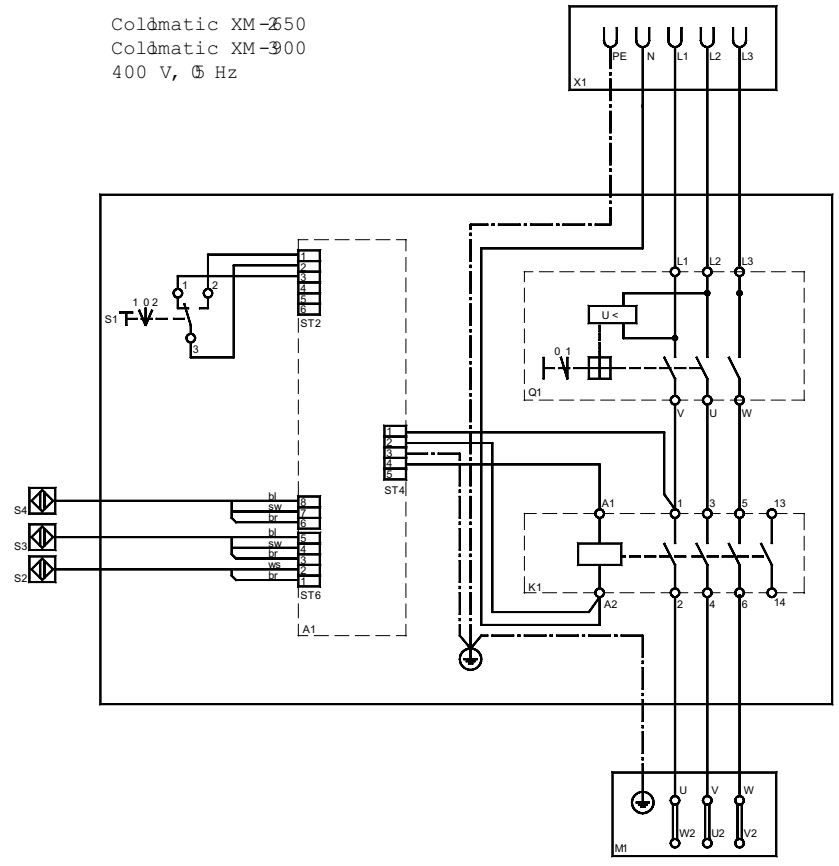

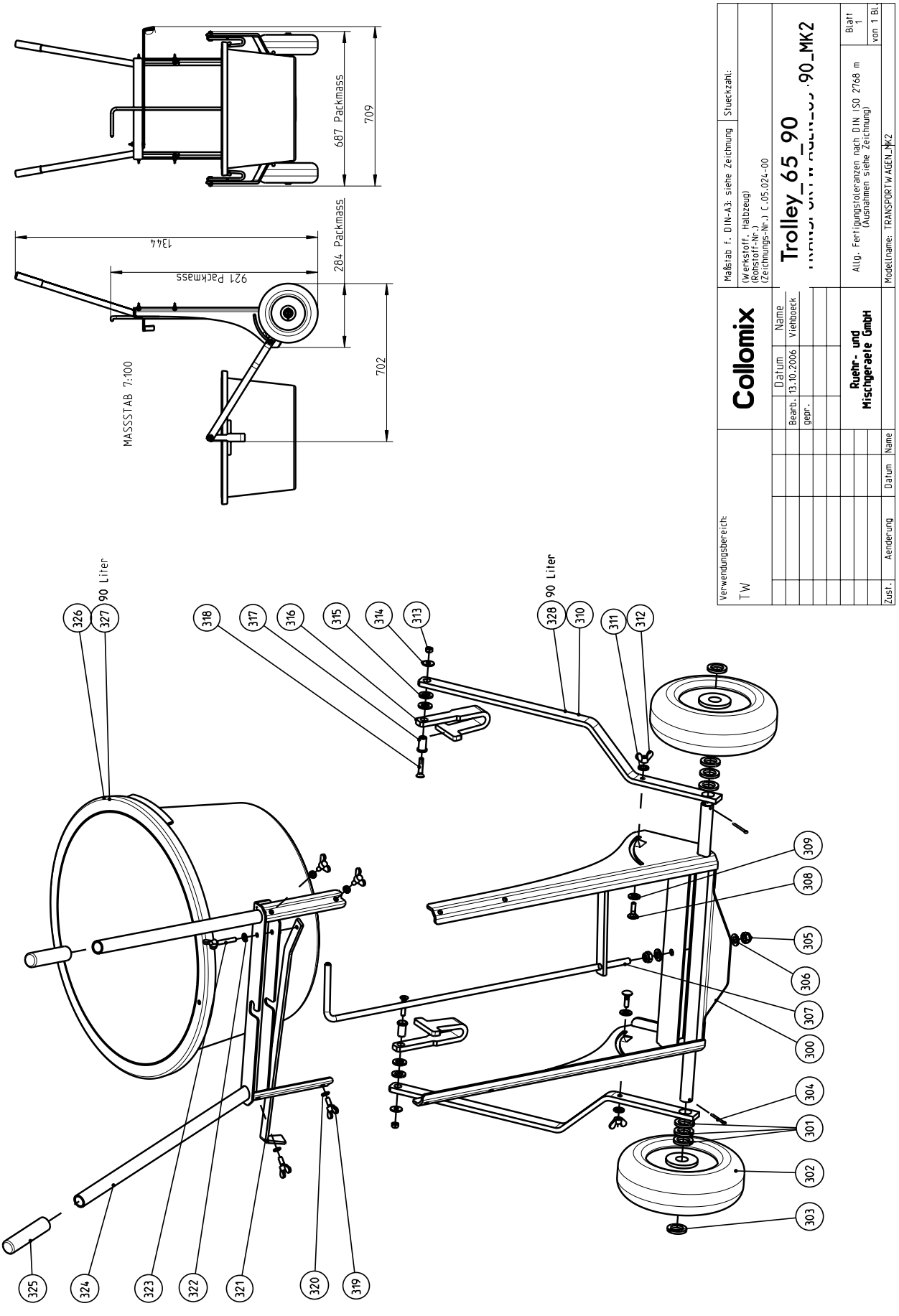
687 Packmass
709
284 Packmass
1344
921 Packmass
702
MASSSTAB 7:100
90 Liter
90 Liter
325
324
323
322
321
320
319
326
327
318
317
316
315
314
313
328
310
311
312
309
308
305
306
307
300
304
301
302
303
Verwendungsbereich:
TW
Collomix
Maßstab f. DIN-A3: siehe Zeichnung
Stueckzahl:
(Werkstoff, Halbzeug)
(Rohstoff-Nr.)
(Zeichnungs-Nr.) C.05.024-00
Trolley_65_90
Datum
Name
Bearb. 13.10.2006 Viehboeck
gepr.
Ruehr- und Mischgeraete GmbH
Allg. Fertigungstoleranzen nach DIN ISO 2768 m (Ausnahmen siehe Zeichnung)
Blatt 1
von 1 Bl.
Modellname: TRANSPORTWAGEN_MK2
Zust.
Aenderung
Datum
Name

Artikelnr.: 07001 - © Collomix Rühr- und Mischgeräte GmbH - P: 05.06