Release to Manufacturing TDP

TECHSOFT 3D

NUMBER: 874631 **REVISION:** B **DOCUMENT TYPE:** RELEASE TO MANUFACTURING **DATE:** 09/05/2016

DESCRIPTION:

THIS DOCUMENT IS A RELEASE TO MANUFATURING TECHNICAL DATA PACKAGE. MODEL HAS BEEN IN CREATED IN ACCORDANCE WITH ASME Y14.5 2009

URGENCY: HIGH

TYPE: MANUFACTURING RELEASE

DUE DATE: 09/14/2016

PROJECT AUTHOR:

NAME: STEVE JOHNSON **EMAIL:** S.JOHNSON@ABCMANUFACTURING.COM

COMPANY: ABC MANUFACTURING **PHONE:** 925-987-6543

PROJECT LEAD ENGINEER:

NAME: BOB SHAW **EMAIL:** BSHAW@XYZINDUSTRIES.COM

COMPANY: XYZ INDUSTRIES **PHONE:** 415-345-6789

COMMENT: **SIGNATURE:**

STATUS: IN PROGRESS

DOCUMENTS ATTACHED

TYPE	VERSION NUMBER	FILE NAME	DATE
INTERACTIVE 3D PDF	B	874631 REVB, PUMP ASSY	09/05/2016
2D DRAWINGS		874631 REVB, PUMP ASSY	09/05/2016

PARTS LIST

#	NAME	QTY
1	450722_IMPELLER_REVB	1
2	348766_DRIVE_SHAFT_REVA	1
3	778594_CASE_REVA	1
4	667201_GASKET_REVA	1
5	134019_COVER_REVB	1
6	WASHER_NAS620_8	7
7	NAS1352_08_20	7
8	127_TN9	1
9	127_TN9_PART1	1
10	127_TN9_PART2	1
11	127_TN9_PART3	10
12	127_TN9_PART4	10

Isolate | Show All

MASS	
MASS UNITS	
MATERIAL	

MATURITY CODE
ANNOTATION & ATTRIBUTE CODE
GEOMETRY CODE

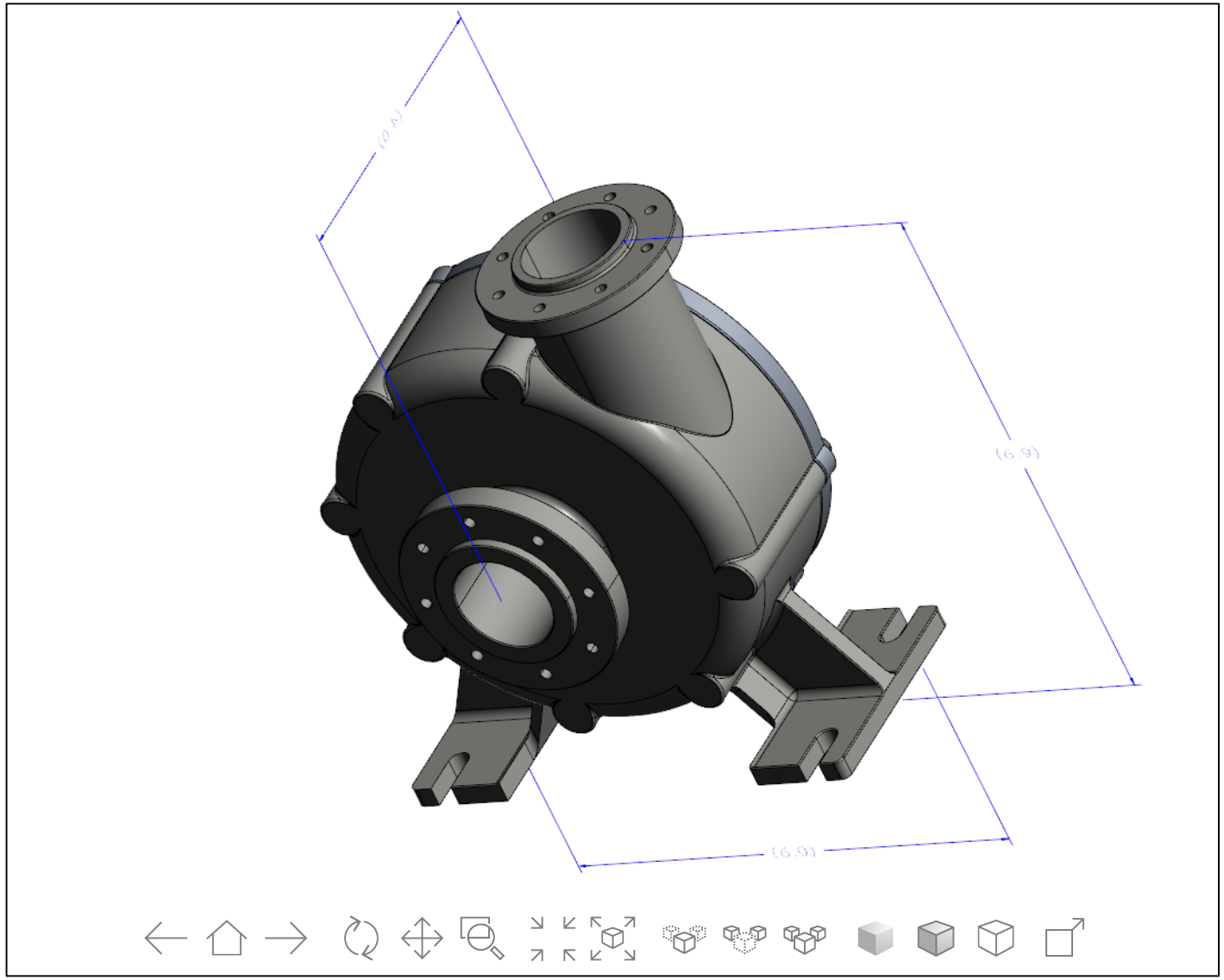

6D-SECTIONA 6A-FRONT 08-EXPLODED COVER-FRONT

APPROVER NAME	APPROVER FUNCTION	DATE	SIGNATURE REQUIRED
STEVE JOHNSON	AUTHOR	09/05/2016	SIGN HERE
BOB SHAW	LEAD ENGINEER	09/07/2016	SIGN HERE
EDWARD GREEN	CHECKER	08/25/2016	SIGN HERE
RICK ROBERTS	DESIGN	08/05/2016	SIGN HERE

TECH SOFT 3D

REV	DESCRIPTION
B	874631 Pump Assembly

NOTES/WORK INSTRUCTIONS

TECH SOFT 3D 2016, ALL RIGHTS RESERVED.

NOTES:

SELECT PARTS FROM BOM OR MODELTO POPULATE ATTRIBUTE AND PROPERTY INFORMATION IN THE DESIGNATED FIELDS.

MODEL HAS BEEN CREATED IN ACCORDANCE WITH ASME Y14.5 2009.

CAGE CODE

TECH SOFT 3D
1567 SW CHANDLER
AVE. BEND, OR 97702

DESCRIPTION

NUMBER REVISION

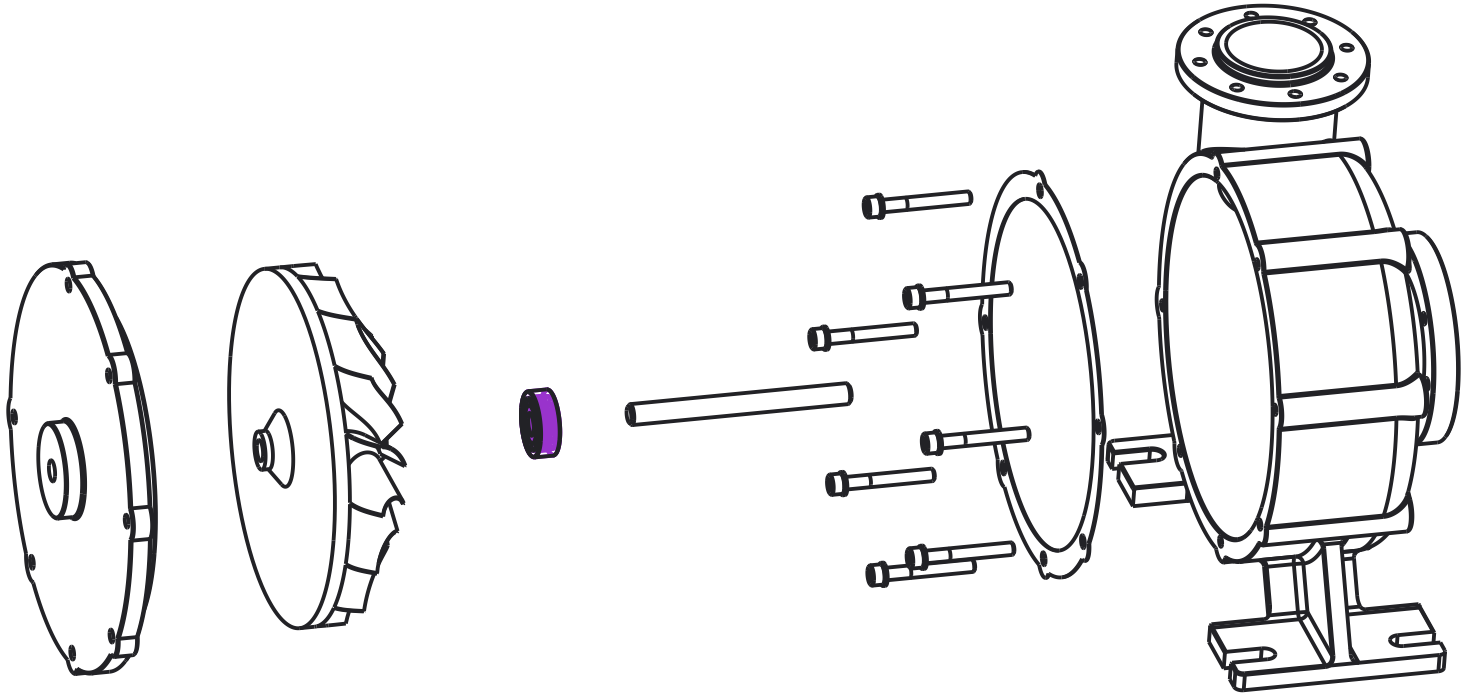

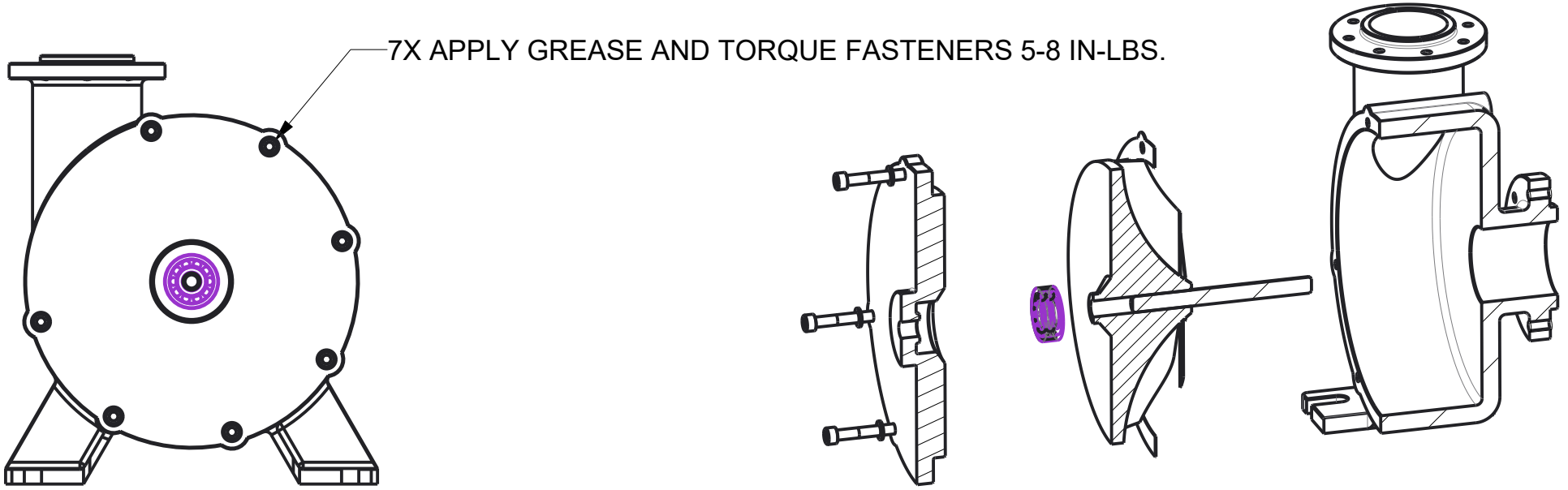
7X APPLY GREASE AND TORQUE FASTENERS 5-8 IN-LBS.

PUMP COVER
PART NO: 134019

REVISION: B
REVISION DATE: 09-18-2016
REVISION HISTORY: INITIAL RELEASE

LICENSE AND ROYALTY FREE TECHSOFT 2016
UNCLASSIFIED

NOTES:
1. INTERPET IN ACCORDANCE WITH ASME Y14.5-2009, ASME Y14.41-2012 AND ASME Y14.100-2013.

2. DESIGN MODEL 134019.PRT or 134019.STEP IS REQUIRED TO COMPLETE PRODUCT DEFINITION.

3. UNLESS OTHERWISE SPECIFIED, DIMENSIONS ARE IN INCHES.

4. SCALE AND SIZE ARE NOT APPLICABLE.

5. ALL DIMENSIONS OBTAINED FROM THE MODEL ARE BASIC UNLESS OTHERWISE SPECIFIED.

6.TOLERANCES FOR ALL UNTOLERANCED SURFACES = ⌓ |.020| A Ⓜ | B AND INSPECTION IS NOT REQUIRED.

7. PRODUCT CHARACTERISTICS (PC) SHALL BE VALIDATED PER AS9102B AND QIF 2.1 AND ARE IDENTIFIED AS: [PC-###].

8. ALL BOTTOM FILLETS ARE MAX R 0.031.

9. UNLESS OTHERWISE SPECIFIED, MAXIMUM SURFACE ROUGHNESS FOR ALL MACHINED SURFACES SHALL BE 125 MICROINCHES.

10. FULL ANNOTATIONS PRESENTED (A3). THIS DATA SET IS PRESENTED FOR HUMAN READABILITY.

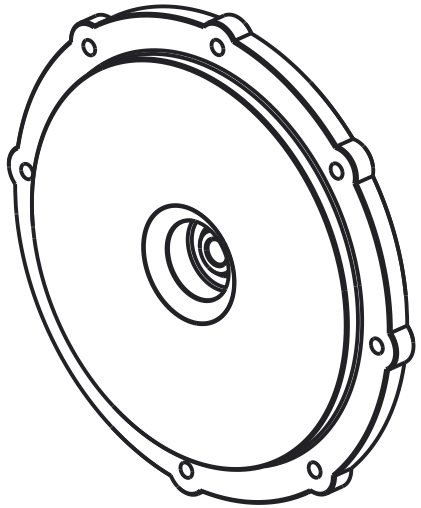

MATERIAL: NYLON
MASS: 0,410 LBF
MATURITY CODE: M3-PRODUCTION
ANNOTATION & ATTRIBUTE CODE: A3-FULL
GEOMETRY CODE: G3-FULL

ORIGINAL DESIGN ACTIVITY: Action Engineering, LLC

RELEASE APPROVAL
C.HAMILTON 09-14-2016

APPROVALS
FUNCTION NAME DATE
DESIGN J.HERRON 08-16-2016
CHECKER R.ASTHEIMER 08-20-2016
RESPONSIBLE ENGINEERING J.HAMILTON 08-24-2016
MANUFACTURING B.SMITH 08-30-2016

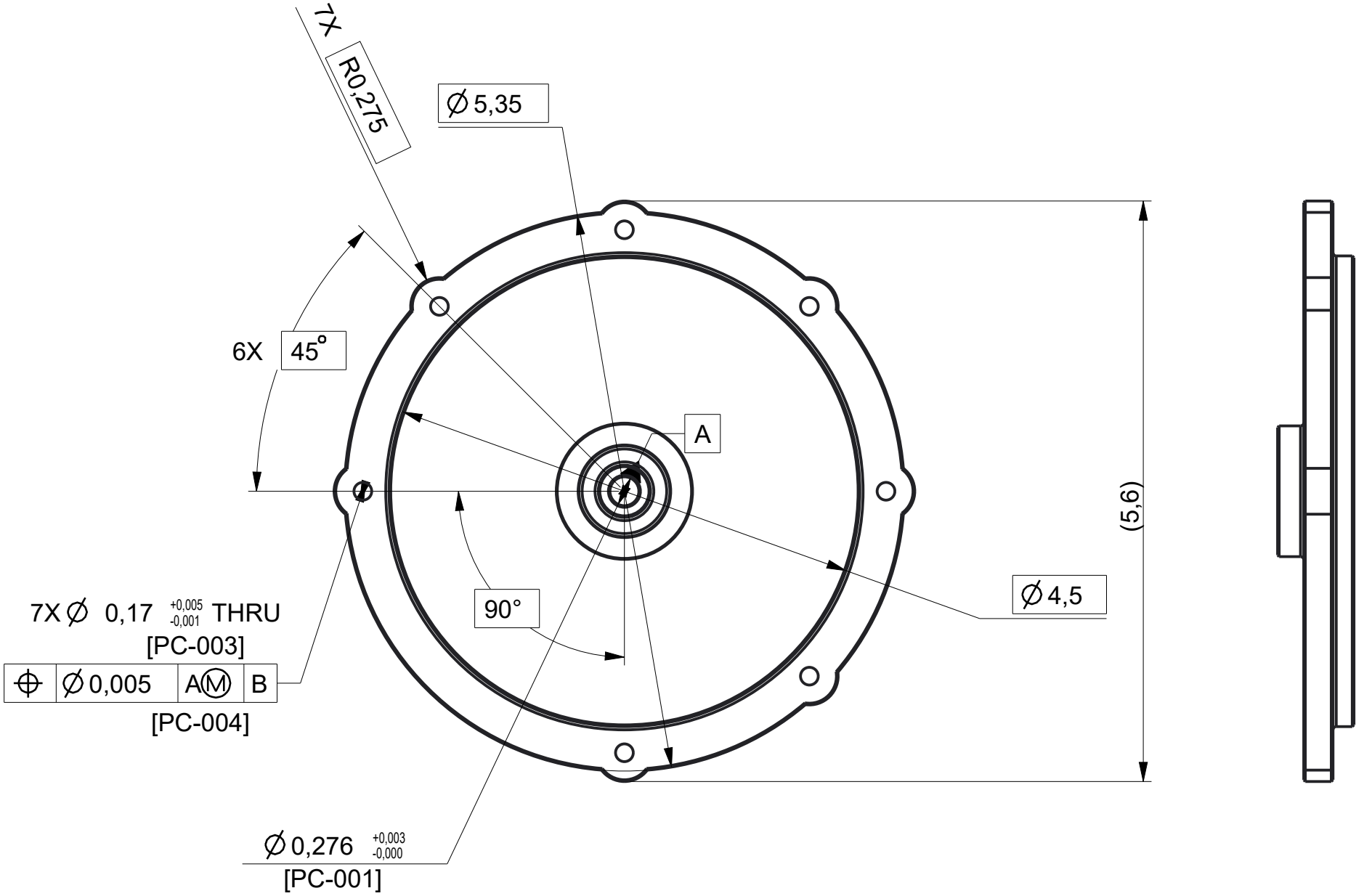
7X R0,275
Ø 5,35
6X 45°
A
90°
(5,6)
Ø 4,5
7X Ø 0,17 +0,005 -0,001 THRU
[PC-003]
⌖ Ø 0,005 AⓂ B
[PC-004]
Ø 0,276 +0,003 -0,000
[PC-001]

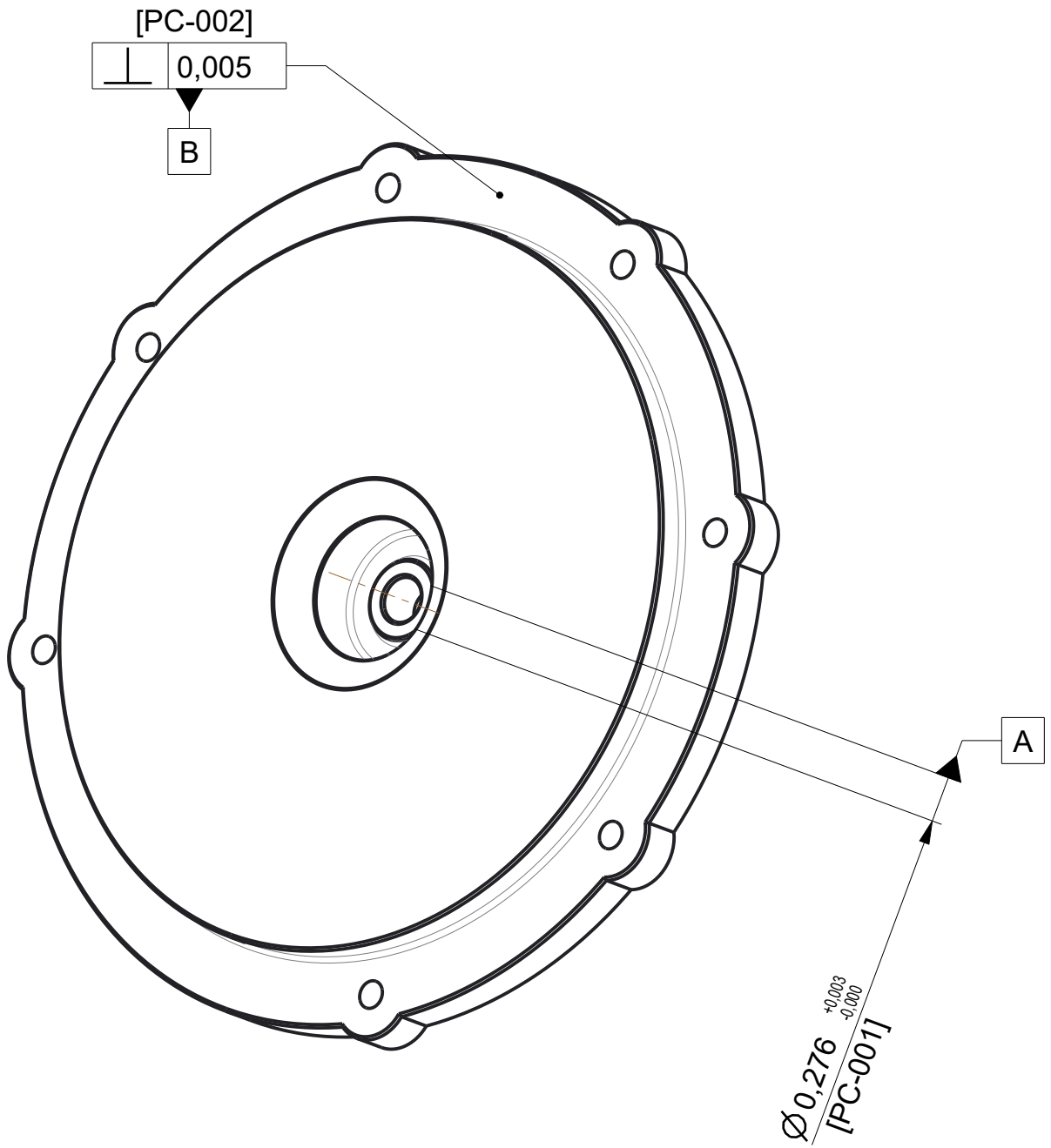
[PC-002]
0,005
B
A
Ø0,276 +0,003 -0,000
[PC-001]